Replacement Parts for - PAWAN B500 / B750 / B1000

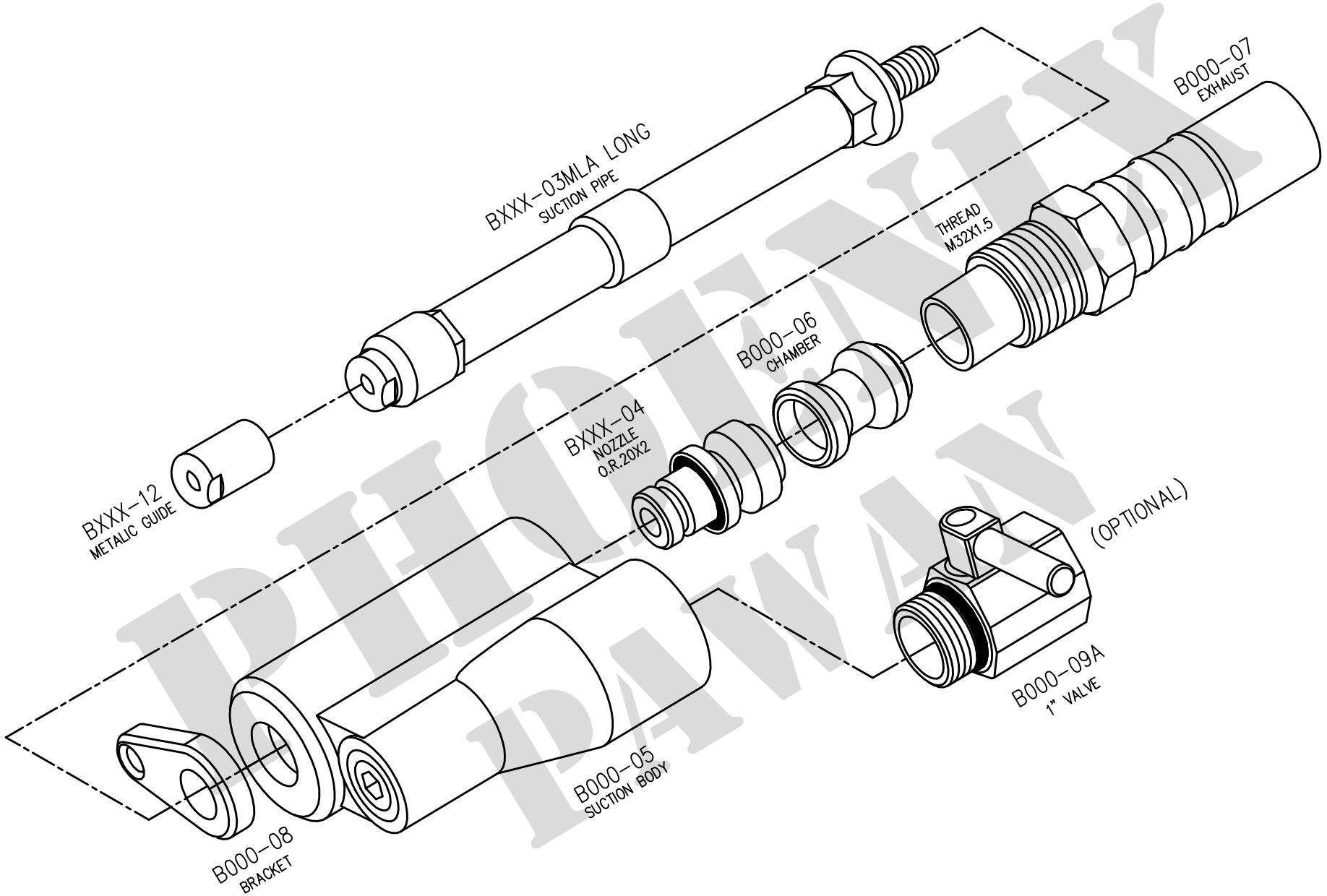

PHOENIX PAWAN