Replacement Parts for - PAWAN H503 / H753 / H1003

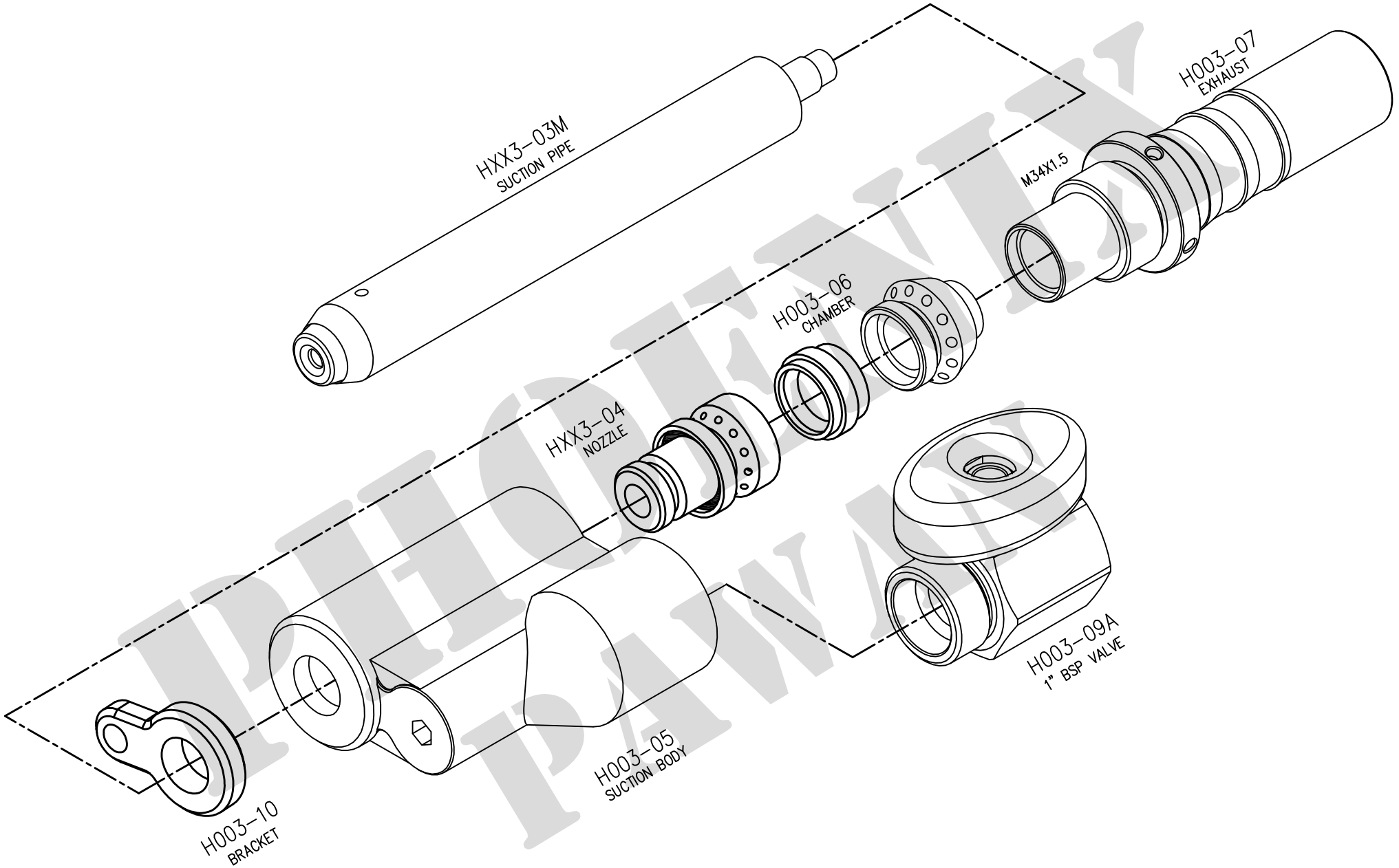

PHOENIX PAWAN