Replacement Parts for - PAWAN T500 / T750 / T1000

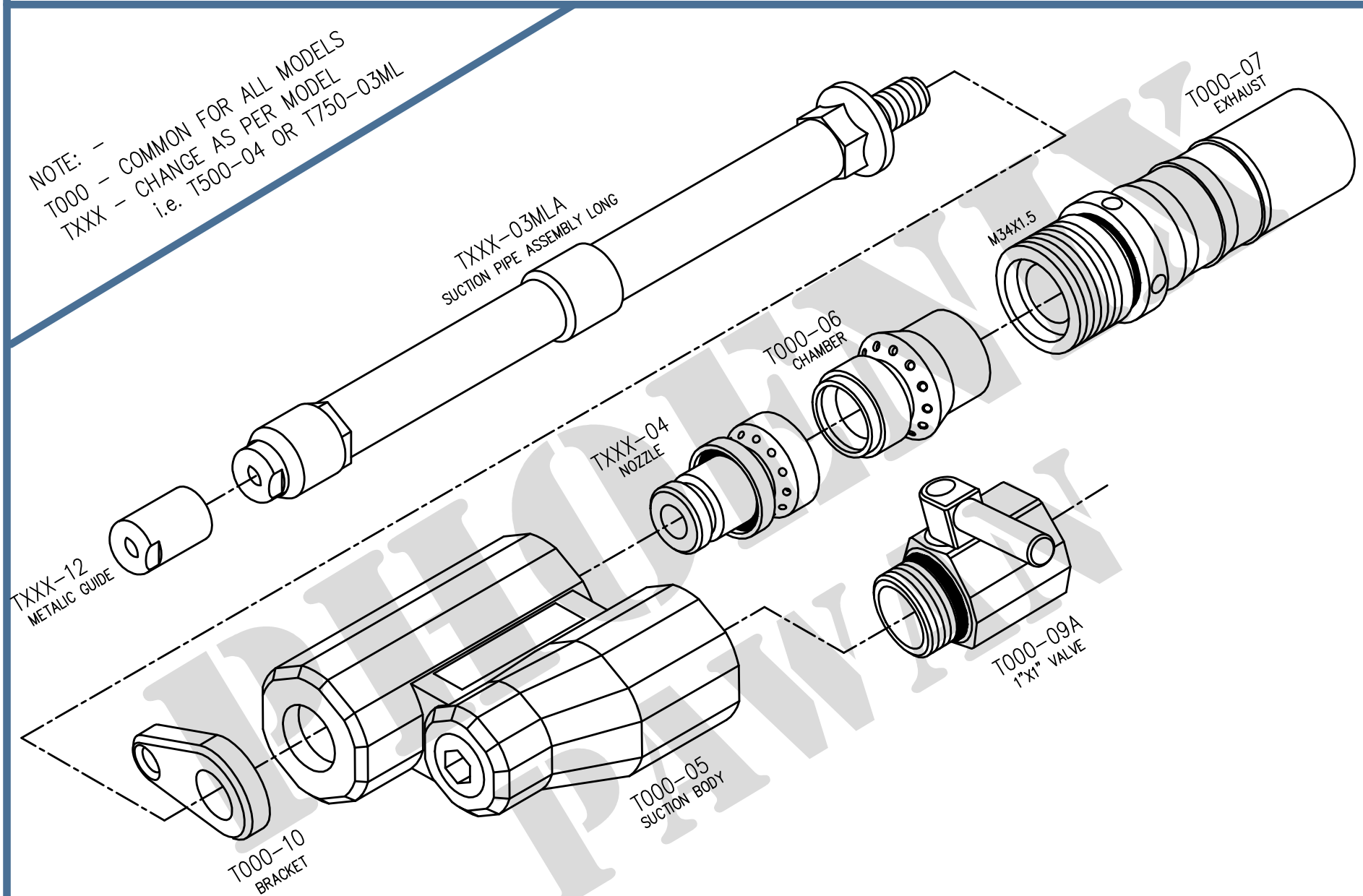

PHOENIX PAWAN